Compact Die-Cast Limit Switches with Positive Opening Mechanism

Positive opening mechanism

Model LJM-D□□□

EN-compliant switches, meeting global standards. Switches certified to meet EN, UL and CSA standards

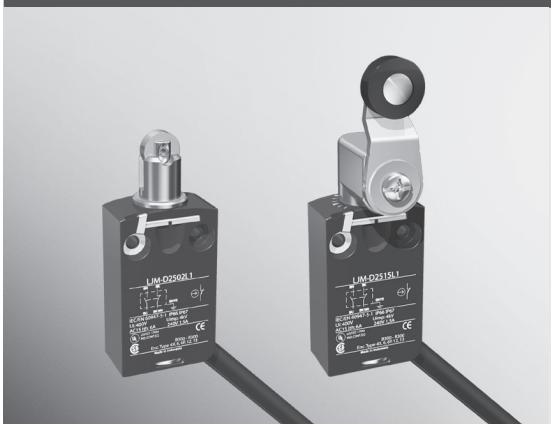

- **With UL/CSA/CE marking (excluding some models)**
- **Positive opening mechanism (N.C. contact only)**
- **Compact size**
- **Superior IP67 seal**
- **Preleaded**
- **Cabling both lengthwise and crosswise from the switch is possible, allowing reduced stress on the cable.**

ORDER GUIDE

Actuator type	Cable length	Catalog listing
Metal roller plunger 	1 m	**LJM-D2502L1**
	3 m	**LJM-D2502L3**
Resin roller lever 	1 m	**LJM-D2515L1**
	3 m	**LJM-D2515L3**

INTERNAL SWITCH

Internal switches in the **LJM-D** Series have an N.C./N.O. electrically independent contact (Zb) structure.
The positive opening mechanism is used to forcibly open the contacts (N.C. contacts only) even if they are fused accidentally.

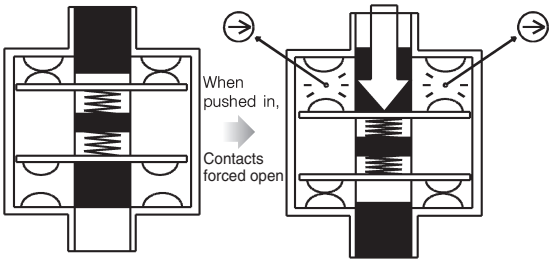

SPECIFICATIONS

Standards	**Compliance**	Product related: IEC 60947-5-1Ⓔ, EN 60947-5-1Ⓔ, Machine related: IEC 60204-1, EN 60204-1
	Certification	UL 508, CSA C22-2No.14
Structure	**Ingress protection**	IP66, IP67 (IEC 60529, JIS C 0920)
	Electrical shock protection	class I (IEC 61140)
	Pollution degree	3
	Internal switch	Slow action: 1N.C.+1N.O.(BBM)*
Electrical performance	**Electrical rating**	AC-15; B300 (Ue=240V, Ie=1.5A) DC-13; R300 (Ue=250V, Ie= 0.1A)
	Insulation resistance	Between same-polarity terminals: 100 MΩ or more Between each terminal and non-live metal part: 100 MΩ or more
	Rated thermal current (Ith)	6A
	Short-circuit protection	6A breaking fuse, type gG (gl)
	Rated insulation voltage (Ui)	400V IEC 60947-5-1, 300V UL508
	Conditional rated short-circuit current	1,000A
	Rated impulse withstand voltage (Uimp)	4,000V
Mechanical performance	**Impact resistance**	250 m/s^2 (18 ms) IEC 60068-2-27
	Vibration resistance	250 m/s^2 (10 to 500 Hz) IEC 60068-2-6
	Allowable operating speed (with 30˚ dog)	Minimum operating speed: **LJM-D2502L**□0.1 m/s, **LJM-D2515L**□0.3 m/s Maximum operating speed: **LJM-D2502L**□0.5 m/s, **LJM-D2515L**□1.5 m/s
Product life	**Mechanical**	10 million operations or more
	Electrical	2 million operations (at up to 3,600 operations/hour)
Ambient conditions	**Operating temperature**	25 to +70˚C (without freezing)
	Operating humidity	Max. 85%RH
	Storage temperature	−40 to +70˚C
Tightening torque	**Switch body**	1.2 to 1.5 N·m (M4 hexagon socket head cap bolt)

*BBM: Break Before Make

		LJM-D2502L□		**LJM-D2515L**□
		Vertical operation	Dog (30˚) operation	
Operating characteristics	**O.F.** (max. operating force needed for N.C. operation)	8.5 N	7.0 N	0.1 N·m
	P.O. (min. travel to positive opening position)	3.1 mm	5.6 mm	45˚
	P.O.F. (minimum force for positive opening)	42.5 N	35 N	0.5 N·m
	PT1 (pretravel for N.C. operation)	(1.8 mm)	(3.1 mm)	(25˚)
	PT2 (pretravel for N.O. operation)	(2.6 mm)	(4.6 mm)	(36˚)
	T.T. (total travel)	(5 mm)	–	(90˚)

CONTACT FORM AND WIRING

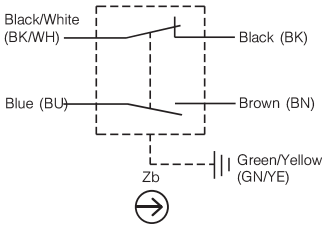

Connector with cable
See page F-001

OPERATING CHARACTERISTICS AND EXTERNAL DIMENSIONS

(unit: mm)

Metal roller plunger: LJM-D2502L□

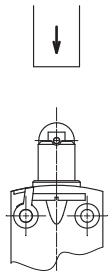

Vertical operating characteristics

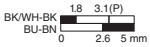

Contacts open
Contacts closed
(P) = min. travel to positive opening position

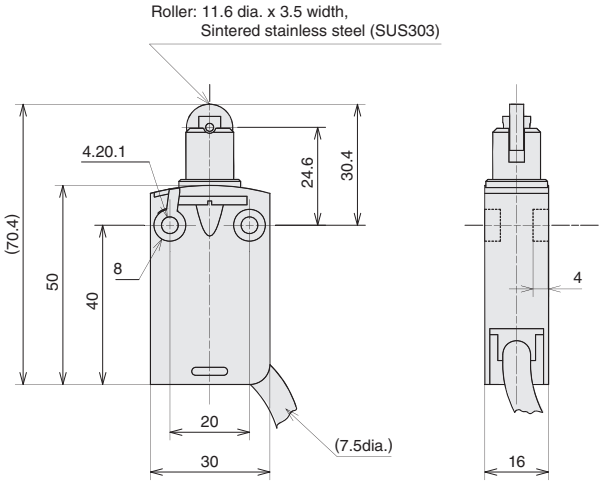

O.F. (max. operating force needed for N.C. operation) (N max.)	8.5
P.T. (pretravel) (mm)	N.C.:(1.8), N.O.:(2.6)
T.T. (total travel) (mm)	(5)
P.O. (min. travel to positive opening position) (mm min.)	3.1
P.O.F. (min. force for positive opening) (N min)	42.5

Note 1. Housing is made of zinc alloy painted blue.
Note 2. Cable is oil-resistant vinyl round cabtyre, 0.75 mm^2, 5-core wire. Outside dia.: approx. 7.5 mm. Sheath color: black.
Note 3. Dimensional tolerance is ±0.4 unless otherwise specified.

Resin roller lever: LJM-D2515L□

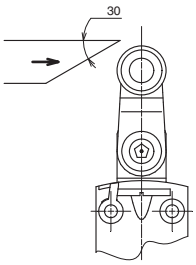

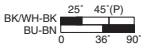

Contacts open
Contacts closed
(P) = min. travel to positive opening position

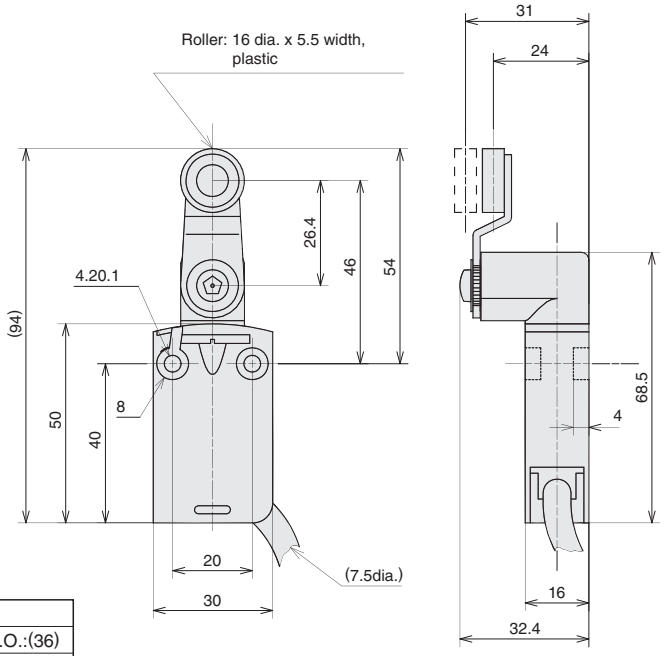

O.F. (max. operating force needed for N.C. operation) (N·m max.)	0.1
P.T. (pretravel) (°)	N.C.:(25), N.O.:(36)
T.T. (total travel) (°)	90
P.O. (min. travel to positive opening position) (° min.)	45
P.O.F. (min. force for positive opening) (N-m min.)	0.5

Note 1. Housing is made of zinc alloy painted blue.
Note 2. Cable is oil-resistant vinyl round cabtyre, 0.75 mm^2, 5-core wire. Outside dia.: approx. 7.5 mm. Sheath color: black.
Note 3. Dimensional tolerance is ±0.4 unless otherwise specified.

PRECAUTIONS FOR USE

1. Mounting the switch

- Always tighten each part of the safety switch to the tightening torque recommended in the product specifications. Tightening any part excessively, might damage the threads and/or other parts.
- Mount the dog so that no force is directly applied to the actuator in the free state.
- Do not use silicone adhesive or silicone grease. Doing so might result in faulty electrical contact.

2. Wiring

- Do not do wiring work with the power ON. Doing so might cause an electrical shock or cause the device to operate unexpectedly.

3. Adjustment

- Do not apply excessive force (5 times larger than the O.F.) to the actuator when it is beyond the operating limit position. Doing so might break the switch.
- Adjust the actuator motion so that it exceeds the specified P.O. (travel to positive opening position) value but not the operating limit position.

4. Environment

- Do not use the switch in an environment where strong acid or alkali is directly splashed onto it.

5. Other cautions

- Do not apply a lubricant to the sliding part of the actuator or any other component. Application of an inappropriate lubricant may degrade sliding performance or impair the protective structure.
- Remove any foreign substances adhering to the sliding part. Dust or any other foreign substance attached to the sliding part may cause a malfunction.
- Check the actual load.
  To increase reliability, confirm that the switch has no problems in actual use before using the switch.

Before use, thoroughly read the “Precautions for use” and “Precautions for handling” in the Technical Guide on pages **D-101** to **D-112** as well as the instruction manual and product specification for this switch.

Connector with cable

See page F-001

Please read “Terms and Conditions” from the following URL before ordering and use.

https://www.azbil.com/products/factory/order.html

Azbil Corporation
Advanced Automation Company

Yamatake Corporation changed its name to Azbil Corporation on April 1, 2012.

1-12-2 Kawana, Fujisawa
Kanagawa 251-8522 Japan

URL: https://www.azbil.com

1st Edition : Jan. 2018

CP-GC1003E Vol.2